DUCTWORK LEGEND

- 700x350 — DUCT DIMENSIONING, VIEWED SURFACE IS THE FIRST DIMENSION
- TEF-1 — EQUIPMENT REFERENCE
- C-04 / TEF-1 / 50 — REF No / EQUIP REF / L/s — DIFFUSER/GRILLE TAG
- CL HGT 2700 — CEILING HEIGHT
- UNINSULATED SHEETMETAL DUCTWORK
- DUCTWORK INTERNALLY LINED WITH 25mm ACOUSTIC INSULATION - MINIMUM R VALUE OF $1.0m^2W/K$
- DUCTWORK INTERNALLY LINED WITH 50mm ACOUSTIC INSULATION - MINIMUM R VALUE OF $1.2m^2W/K$
- DUCTWORK INTERNALLY LINED WITH 75mm ACOUSTIC INSULATION - MINIMUM R VALUE OF $2.0m^2W/K$
- CIRCULAR SPIRAL WOUND DUCTWORK
- CROSS SECTIONED DUCT RISER/DROPPER
- HIDDEN DUCT RISER/DROPPER
- 50mm ACOUSTICALLY (CONDITIONED SPACE), 75mm (NON-CONDITIONED SPACE) INSULATED FLEXIBLE DUCTWORK (INTERNAL DIMENSION SHOWN ON DRAWINGS) - 50mm - R VALUE OF $1.2m^2W/K$, 75mm - R VALUE OF $2.0m^2W/K$
- ACOUSTICALLY INSULATED RECTANGULAR SHEETMETAL DUCTWORK C/W 35mm TDC FLANGE & 50mm LONG UNINSULATED SHEEMETAL TAKE-OFF
- RECTANGULAR SHEETMETAL DUCTWORK 90° BEND C/W TURNING VANES @ 150mm SPACING
- RECTANGULAR SHEETMETAL DUCTWORK TRANSITION C/W LONG STRAIGHT TURN-OUTS
- RECTANGULAR TO ROUND SHEETMETAL DUCTWORK TRANSITION C/W 50mm LONG STRAIGHT TURN-OUTS
- RECTANGULAR SHEETMETAL DUCTWORK RADIUS BEND C/W 50mm LONG STRAIGHT TURN-OUTS
- 200mm LONG SHOE C/W PUSH-PULL C/W 50mm LONG STRAIGHT TURN-OUT & 45° 150mm LONG SHOE
- 200mm LONG FLEXIBLE CONNECTION

AIR DIFFUSION LEGEND

- Ø600 SQUARE FACE SWIRL DIFFUSER (REFER SPECIFICATION) WITH ACOUSTICALLY LINED CUSHION HEAD BOX OVER
- 600x600 EGGCRATE TYPE RETURN OR AIR TRANSFER AIR GRILLE C/W ACOUSTICALLY INSULATED CUSHION HEAD BOX
- 300x300 EGGCRATE TYPE OUTSIDE AIR GRILLE C/W PLAIN CUSHION HEAD BOX OVER
- PROPRIETARY BRANCH TAKE OFF (90°) (C/W BUTTERFLY BALANCING DAMPER)
- BRANCH TAKE OFF
- OPPOSED BLADE DAMPER (PLAN & ELEVATION)
- DIRECTION OF AIR FLOW

PIPEWORK LEGEND

- 20mm EXTERNALLY INSULATED REFRIGERANT PIPEWORK TO MINIMUM R VALUE OF $0.8m^2W/K$
- DRAIN TO TUNDISH
- PIPEWORK DROP
- PIPEWORK RISER

EQUIPMENT REF

- CP — AIR CONDITIONING CONTROL PANEL MOUNTED 1500mm ABOVE FLOOR LEVEL.
- T — TEMPERATURE SENSOR MOUNTED 1500mm ABOVE FLOOR LEVEL.

BD	BUTTERFLY DAMPER
VCD	VOLUME CONTROL DAMPER
OBD	OPPOSED BLADE DAMPER
GEF	GENERAL EXHAUST FAN
OAF	OUTSIDE AIR FAN
OAC	OUTSIDE AIR COWL
ACC	AIR COOLED CONDENSER
ACU	FAN COIL UNIT
AP	ACCESS PANEL
AF	AIR FILTER
ET	EQUAL TRANSITION
FB	FLAT BOTTOM
FT	FLAT TOP
FS	FLAT SIDE
SB	SQUARE BEND
SU	DUCTWORK SET UP (ARROW DENOTES DIRECTION)
SD	DUCTWORK SET DOWN (ARROW DENOTES DIRECTION)
H	DENOTES HORIZONTAL DUCTWORK LENGTH
V	DENOTES VERTICAL DUCTWORK LENGTH
OV.	DENOTES OVALISED (CIRCULAR DUCTWORK/SPIGOT
SE	SEALED DUCTWORK END
(E)	DENOTES EXISTING

BY OTHER TRADES

- A/P — 600x600 CEILING ACCESS PANEL
- 0.2 — DOOR RELIEF GRILLE BY BUILDER 0.15-600x400mm 0.2-600x500mm
- 1 & 3 PHASE ISOLATORS
- IWTD — IN-WALL TUNDISH
- AUDIBLE/STROBE ALARM
- DENOTES ROOF PLANT PLATFORM OR 600mm WIDE ROOF ACCESS WALKWAY

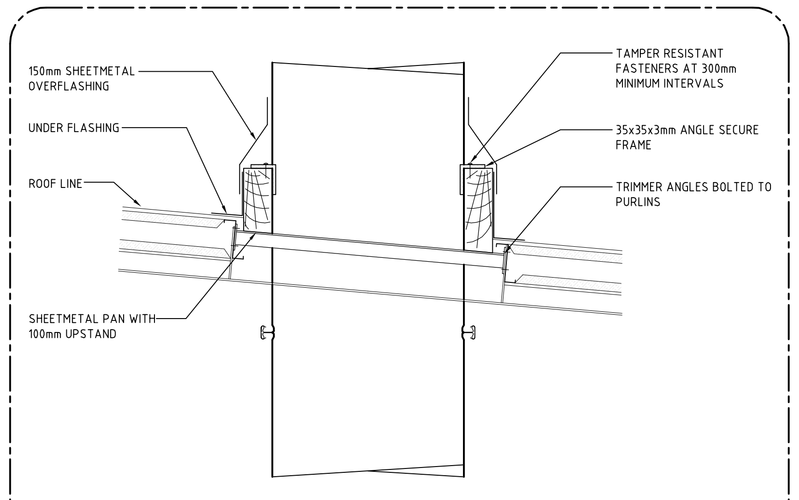

TYPICAL ROOF DUCTWORK PENETRATION DETAIL
NTS

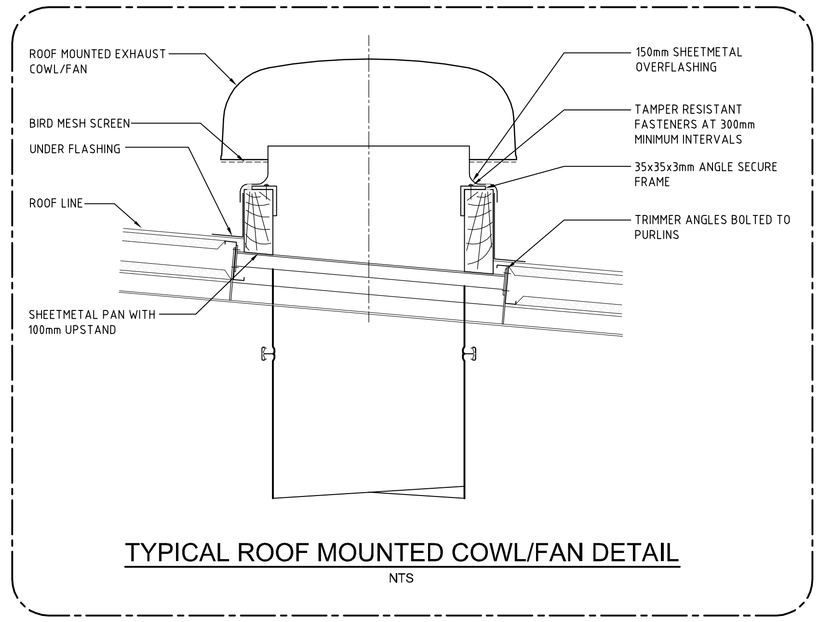

TYPICAL ROOF MOUNTED COWL/FAN DETAIL
NTS

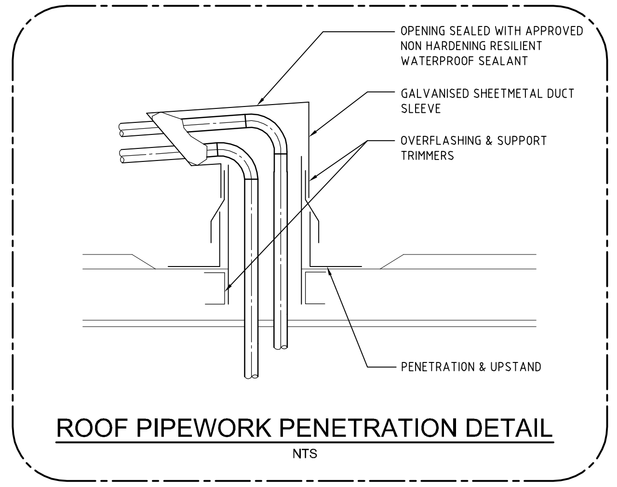

ROOF PIPEWORK PENETRATION DETAIL
NTS

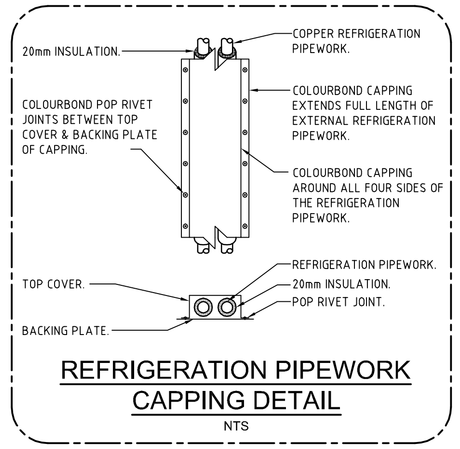

REFRIGERATION PIPEWORK CAPPING DETAIL
NTS

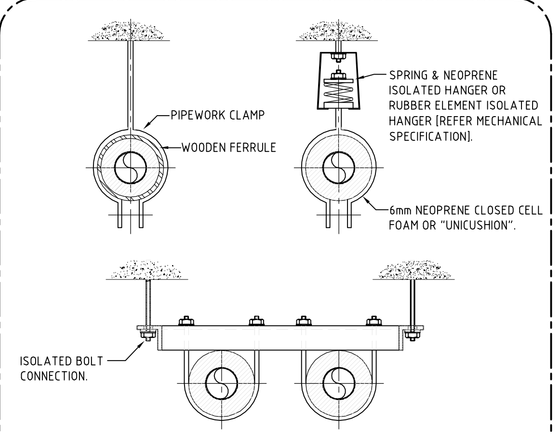

TYPICAL PIPEWORK SUPPORT DETAIL
NTS

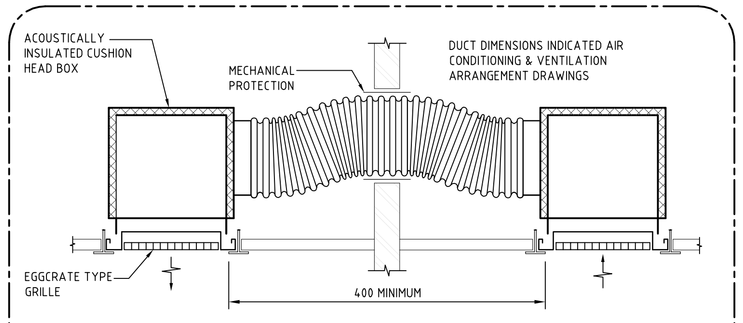

FLEXIBLE TRANSFER DUCT DETAIL
NTS

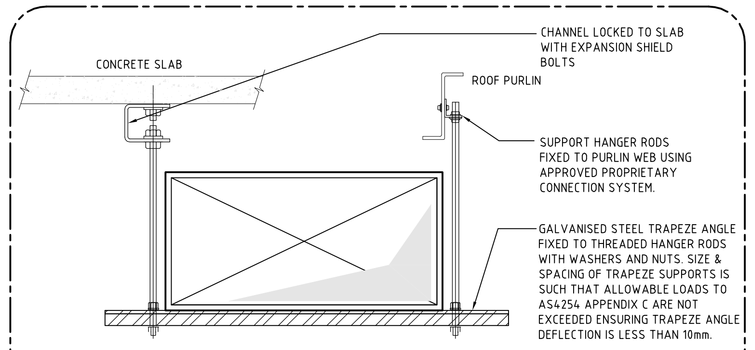

TYPICAL DUCT MOUNTING DETAIL
NTS

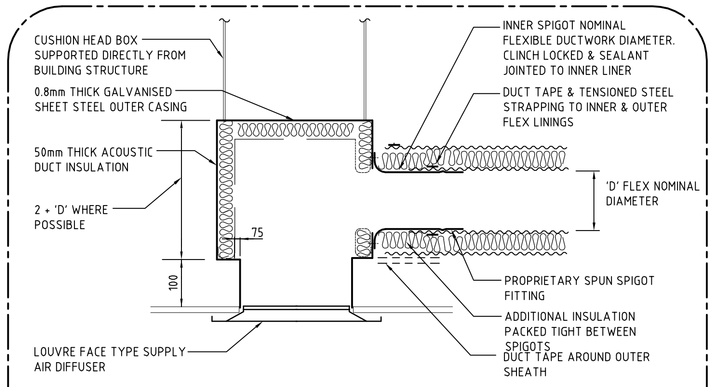

TYPICAL CUSHION HEAD BOX DETAIL
NTS

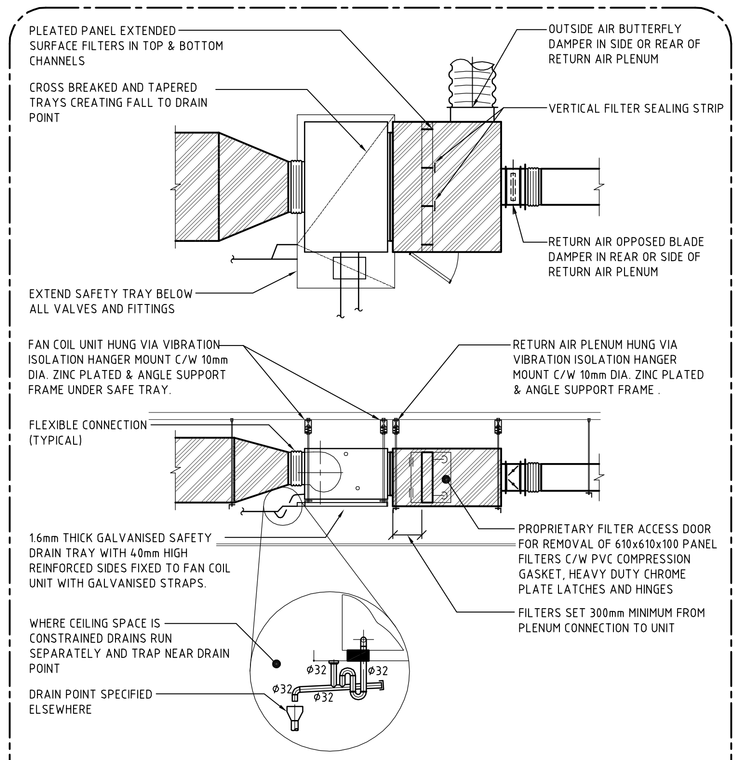

TYPICAL FAN COIL UNIT ARRANGEMENT
NTS

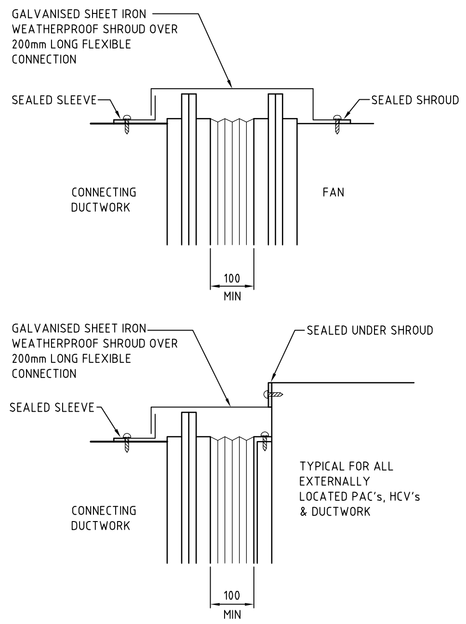

PROTECTIVE SHROUD OVER ALL EXTERNALLY LOCATED FLEXIBLE CONNECTION DETAILS
NTS

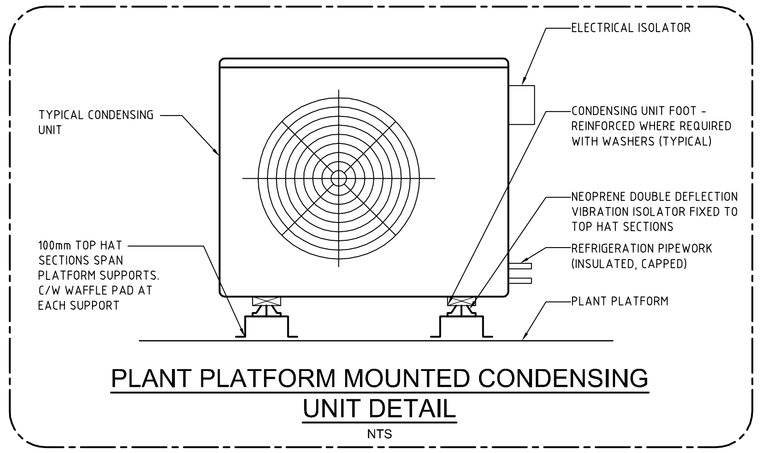

PLANT PLATFORM MOUNTED CONDENSING UNIT DETAIL
NTS

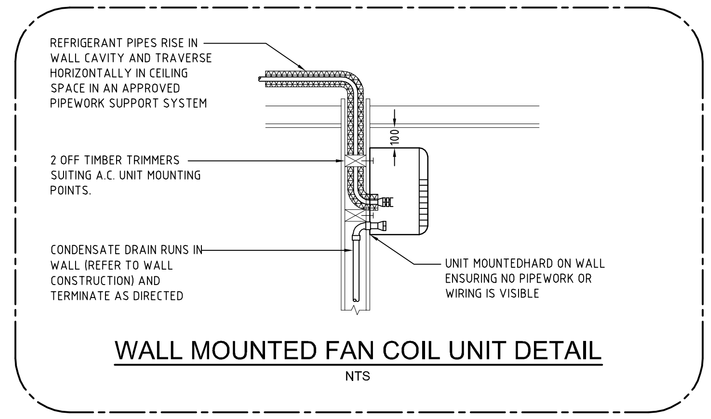

WALL MOUNTED FAN COIL UNIT DETAIL
NTS

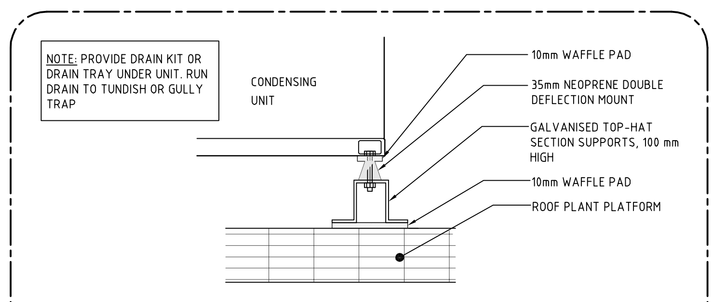

TYPICAL CONDENSING UNIT MOUNTING DETAIL
NTS

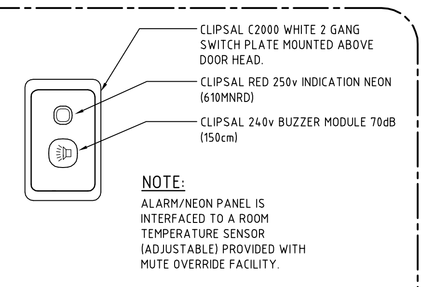

TEMPERATURE ALARM DETAIL
NTS

REV.	AMENDMENT	BY	DATE
C	AS INSTALLED	ASR	13.02.14
B	ISSUED FOR APPROVAL	ASR	29.10.13
A	ISSUED FOR REVIEW & COMMENT	ASR	28.03.13

Project
ST ALOYSUIS COLLEGE
MITCHELL BUILDING
ANGAS STREET, ADELAIDE 5000

Client
INCA CONSTRUCTIONS

Sheet Title
DETAILS & LEGEND OF SYMBOLS

Air Comfort Services Pty Ltd
Air Conditioning Solutions
283 Cormack Road
WINGFIELD
South Australia, 5013
Telephone: 8360 5200
Facsimile: 8360 5211
Email. enquiries@aircomfortservices.com.au
WWW. aircomfortservices.com.au
a.c.n. 007 947 220

Drawn	Date	Scale	Sheet
ASR	13.02.14	AS SHOWN	B1

Drawing No. CG116-M06 — Rev. C